CHILLED WATER DISTRIBUTION

This case study demonstrates Flownex's ability to predict the temperature rise in chilled water networks due to gravitational effects and heat transfer from the environment.

MINING INDUSTRY

CHALLENGE:

A common method used to condition the working environment in deep mines is to chill water on the surface and then pipe it down the mine where it is used to cool the air in the working areas through water/air heat exchangers.

The following two factors impact the efficiency of such systems:

- The temperature rise of the chilled water due to gravitational effects;
- The heat transfer from the often hot environment to the chilled water.

This case study demonstrates Flownex's ability to predict the temperature rise in chilled water networks due to (1) gravitational effects and (2) heat transfer from the environment.

BENEFITS:

- Flownex takes into account temperature rise due to gravitational effects.
- Flownex can simulate heat transfer due to the temperature difference between the fluid and ambient conditions.

SOLUTION:

Flownex was used to calculate the flow and temperature distribution in a chilled water reticulation network for a deep mine. This case study demonstrates Flownex's ability to predict the temperature rise due to gravitational effects as well the code's ability to calculate heat transfer due to the temperature difference between the fluid and ambient conditions.

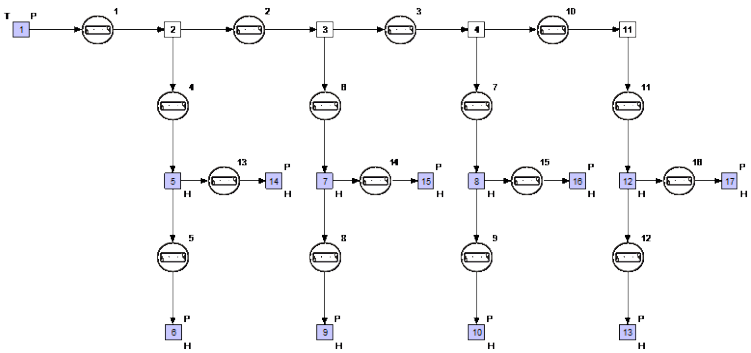

Flownex was used to calculate the flow and temperature distribution in a chilled water reticulation network for a deep mine.

CHILLED WATER DISTRIBUTION NETWORK FOR A DEEP MINE

SYSTEM DESCRIPTION

Figure 1 shows the lay-out of the system that is considered in this case study.

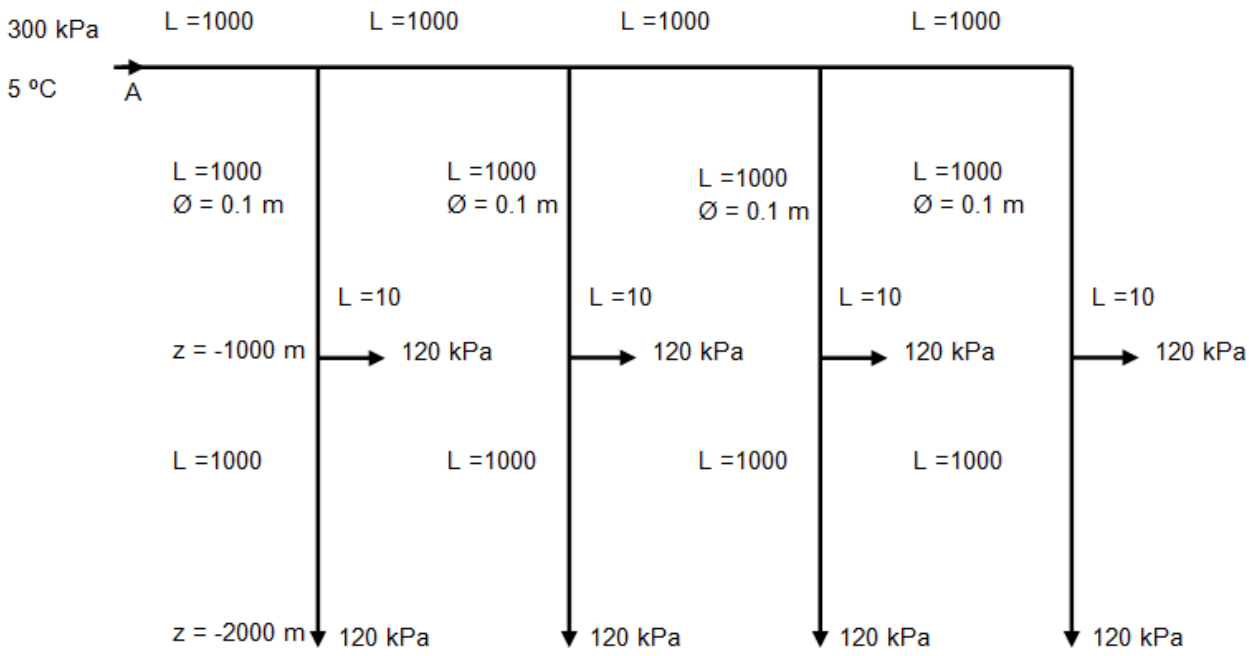

Figure 1: Layout of the chilled water distribution system.

Chilled water is supplied into a header at point A at a pressure of 300 kPa and a temperature of 5 ºC. The header supplies four pipelines that go down the mine with draw-off points at depths of 1000 m and 2000 m.

OBJECTIVE OF SIMULATION

The objective of the simulation is (1) to predict the temperatures rise due to the gravitational effects and (2) to investigate the impact of applying insulation to one of the pipes (pipe 2).

FLOWNEX MODEL

The Flownex model of the system is shown in Figure 2.

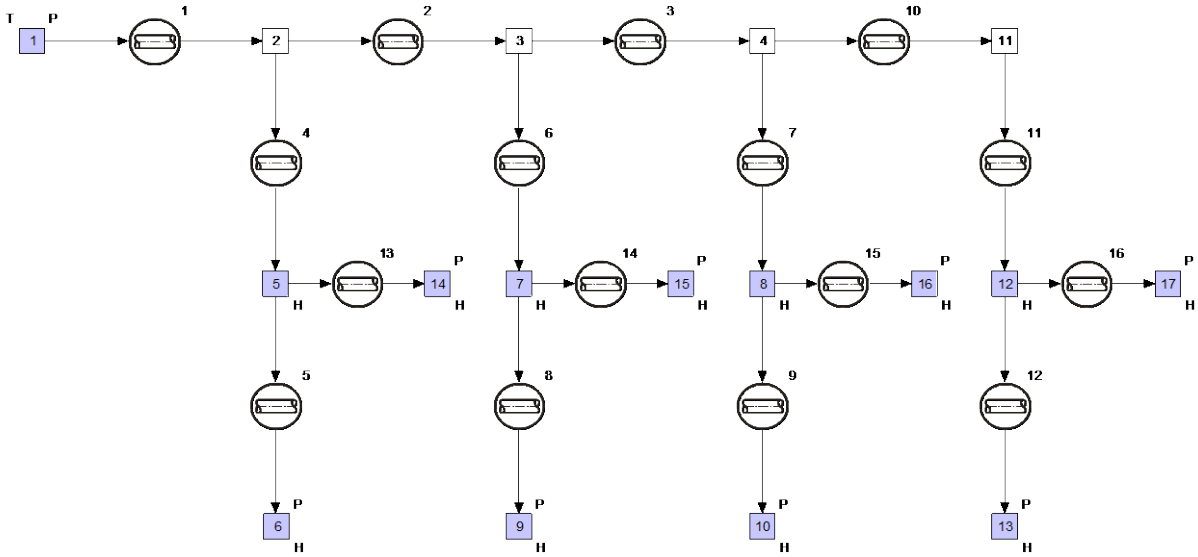

Figure 2: Flownex network of the chilled water distribution system.

DESCRIPTION OF SIMULATION

A fixed pressure of 300 kPa is specified at Node1 while a fixed pressure boundary condition of 120 kPa is specified at all the draw-off points (Nodes 6,9,10,13,14,15,16 and17). In addition to this a fixed temperature boundary condition of 5 °C is specified at Node1.

RESULTS

Three simulations were done. In the first one adiabatic flow was assumed for all pipe section. The temperatures at the draw-off points for this case are as follows:

Node #	Temperature [°C]	Node #	Temperature [°C]
6	9.73	14	7.38
9	9.73	15	7.38
10	9.73	16	7.38
13	9.73	17	7.38

Predict the temperatures rise due to the gravitational effects and investigate the impact of applying insulation to one of the pipes.

As can be seen from the above table the temperatures at a depth of 1000 m are approximately 2.38 ºC higher than the supply temperature of 5 ºC while the temperatures at a depth of 2000 m are approximately 4.73 ºC higher than the supply temperature. At a total mass flow of 350 kg/s this translates to a cooling loss of about 6.9 MW!

A quick check with the following analytical expression based on the energy equation confirms the validity of the results:

$$\text{At depth of 1000m: } \Delta T = \frac{g\Delta z}{c_p} = \frac{9.81 \times 1000}{4189[J/kg.K]} = 2.34\ °C \tag{0.1}$$

$$\text{At depth of 2000m: } \Delta T = \frac{g\Delta z}{c_p} = \frac{9.81 \times 2000}{4189[J/kg.K]} = 4.68\ °C \tag{0.2}$$

The small differences between the Flownex results and the analytical results are due to the kinetic energy that is not taken into account in the analytical expression.

In the second case a wall thickness of 5 mm is specified for pipe 2 together with a convective heat transfer coefficient of 20 W/m2.K and an ambient temperature of 30 ºC. A thermal conductivity value 20 W/m.K is assumed for the pipe wall. The Flownex results for this case are as follows:

Node #	Temperature [ºC]	Node #	Temperature [ºC]
6	9.73	14	7.38
9	10.44	15	8.09
10	10.44	16	8.09
13	10.44	17	8.09

The heat transfer to pipe 2 is 779 kW, which is about 11 percent of the total cooling loss due to gravitational effects. Remember this is only in one pipe section.

In the third case insulation with a thickness of 50 mm and thermal conductivity of 0.8 W/m.K is applied to pipe 2. This reduces the heat transfer to pipe 2 by about 49 percent to 400 kW.

CONCLUSION

Flownex was used to calculate the flow and temperature distribution in a chilled water reticulation network for a deep mine. This case study demonstrates Flownex's ability to predict the temperature rise due to gravitational effects as well the code's ability to calculate heat transfer due to the temperature difference between the fluid and ambient conditions.

A LOCAL UNDERGROUND AIR-COOLING UNIT

Flownex enabled M-Tech to penetrate the market by convincing clients of the economic benefit associated with the Air cooling Units. A detailed techno-economic evaluation was performed using Flownex. This involved a baseline model of a deep mine system and a retrofitted model with Air Cooling Units (ACU). The results showed that by implementing the ACU instead of conventional cooling methods the mine was not only cooled efficiently at depths in excess of 2km (1.2 miles), but substantial savings (25% to 50%) were made in terms of running cost. Furthermore, the best customized solution could be provided to the client taking each client's existing infrastructure and requirements into account.

MINING INDUSTRY

MINING INDUSTRY

CUSTOMER PROFILE:

South Africa's mining industry, largely supported by gold, diamond, coal and platinum group metals production, has made an important contribution to the national economy. As technology improves and the search for natural resources continues most mines are constantly being deepened. In the next few years, the Western Deep mine will reach a depth of 5 km (3.1 miles).

CHALLENGE:

A number of problems arise when expanding operations to greater depths of which heat is the most obvious. For example, at 5 km (3.1 miles) the virgin rock temperature (VRT) reaches 70 °C (158 °F). To create a workable environment the mining industry will need to invest in equipment with a total cooling capacity greater than any system at present. M-Tech Industrial embarked on a project to design, manufacture and provide the mining industry with an alternative solution to conventional cooling methods. The product is a local underground air-cooling unit (ACU) for the areas where the existing chilled water car (CWC) air-cooling systems are ineffective.

BENEFITS:

Flownex enabled M-Tech to penetrate the market by convincing clients of the economical benefit associated with the Air cooling Units. A detailed techno-economic evaluation was performed using Flownex. This involved a baseline model of a deep mine system and a retrofitted model with Air Cooling Units (ACU). The results showed that by implementing the ACU instead of conventional cooling methods the mine was not only cooled efficiently at depths in excess of 2km (1.2 miles), but substantial savings (25% to 50%) were made in terms of running cost. Furthermore, the best customised solution could be provided to the client taking each client's existing infrastructure and requirements into account.

SOLUTION:

Flownex allowed the system designer/engineer to take into account the chilled water temperature increase due to the change in depth and heat transfer from the warm ambient conditions inside the mine. A Flownex network for each client's specific CWC installation could be created quickly. It was then possible to accurately model the heat transfer, pressure change and power consumption throughout the system and also optimise the system by using the Flownex designer feature.

"Thanks to Flownex we have a very effective means to show the advantages and impact of the ACU concept to the mining industry. Flownex provided fast and accurate solutions of CWC and ACU's. The simulation results were used to evaluate the business case of ACU's when it is implemented at depths in excess of 2km. This knowledge optimised the product delivered and gave us an edge over our competitors."

Dr. Martin v Eldik,
Divisional Manager: Heat Pumps,
M-Tech Industrial (2008)

DEEP MINE AIR COOLING UNITS

INTRODUCTION

South Africa's mining industry, largely supported by gold, diamond, coal and platinum group metals production, has made an important contribution to the national economy. As technology improves and the search for natural resources continues most mines are constantly being deepened. In the next few years, the Western Deep mine will reach a depth of 5 km (3.1 miles).

A number of problems arise when expanding operations to greater depths of which heat is the most obvious. For example, at 5 km (3.1 miles) the virgin rock temperature (VRT) reaches 70 °C (158 °F). To create a workable environment the mining industry will need to invest in equipment with a total cooling capacity greater than any system at present.

M-Tech Industrial embarked on a project to design, manufacture and provide the mining industry with an alternative solution to conventional cooling methods. The product is a local underground air-cooling unit (ACU) for the areas where the existing chilled water car (CWC) air-cooling systems are ineffective.

Flownex enabled M-Tech to penetrate the market by convincing clients of the economical benefit associated with the Air cooling Units. A detailed techno-economic evaluation was performed using Flownex. This involved a baseline model of a deep mine system and a retrofitted model with Air Cooling Units (ACU). The results showed that by implementing the ACU instead of conventional cooling methods the mine was not only cooled efficiently at depths in excess of 2km (1.2 miles), but substantial savings (25% to 50%) were made in terms of running cost. Furthermore, the best customised solution could be provided to the client taking each client's existing infrastructure and requirements into account.

M-Tech Industrial embarked on a project to design, manufacture and provide the mining industry with an alternative solution to conventional cooling methods. The product is a local underground air-cooling unit (ACU) for the areas where the existing chilled water car (CWC) air-cooling systems are ineffective.

CHALLENGES

To prove new concepts to the mining industry normally involves experimental setups and expensive instruments to ensure quality measurements in the inhospitable mining environment. Therefore the first challenge is to prove the new concept using simulation results.

This will involve the simulation of the client's existing CWC installation and proving the ability of Flownex to quickly and accurately simulate the installed CWC by comparison to operational data. Then the advantages of using the ACU concept in favour of the existing CWC technology can be illustrated to prospective clients. For comparison purposes a localised cooling load of 1MW (3.4 MBtu/hour) on level 110 of a deep mine is used. Then after the ACU concept is proven, it is followed by modelling a baseline of a deep mine system and retrofit it with Air Cooling Units (ACU) for a detailed techno-economic evaluation. The purpose of the baseline is to simulate the existing situation (potentially without any cooling) in the mine for verification purposes. Any retrofit proposal can then be benchmarked against the baseline. The ACU retrofit proposal are then simulated and evaluated in terms of the cost impact and savings potential compared to the existing situation or any cooling alternatives.

Flownex allowed the system designer/engineer to take into account the chilled water temperature increase due to the change in depth and heat transfer from the warm ambient conditions inside the mine.

SOLUTION

Flownex allowed the system designer/engineer to take into account the chilled water temperature increase due to the change in depth and heat transfer from the warm ambient conditions inside the mine. A Flownex network for each client's specific CWC installation could be created quickly. It was then possible to accurately model the heat transfer, pressure change and power consumption throughout the system and also optimise the system by using the Flownex designer feature.

The Flownex model allowed the system engineer to make detailed calculations of what the influence of the addition or omission of surface cooling towers and chillers would be on the power consumption of the proposed system incorporating ACU's. This can be used to select the most economically viable system layout for different client requirements and existing infrastructure.

RESULTS

The two concepts (ACU vs. CWC) shown below were compared in Flownex. The existing performance of installed CWC could be simulated and accurately predicted in Flownex.

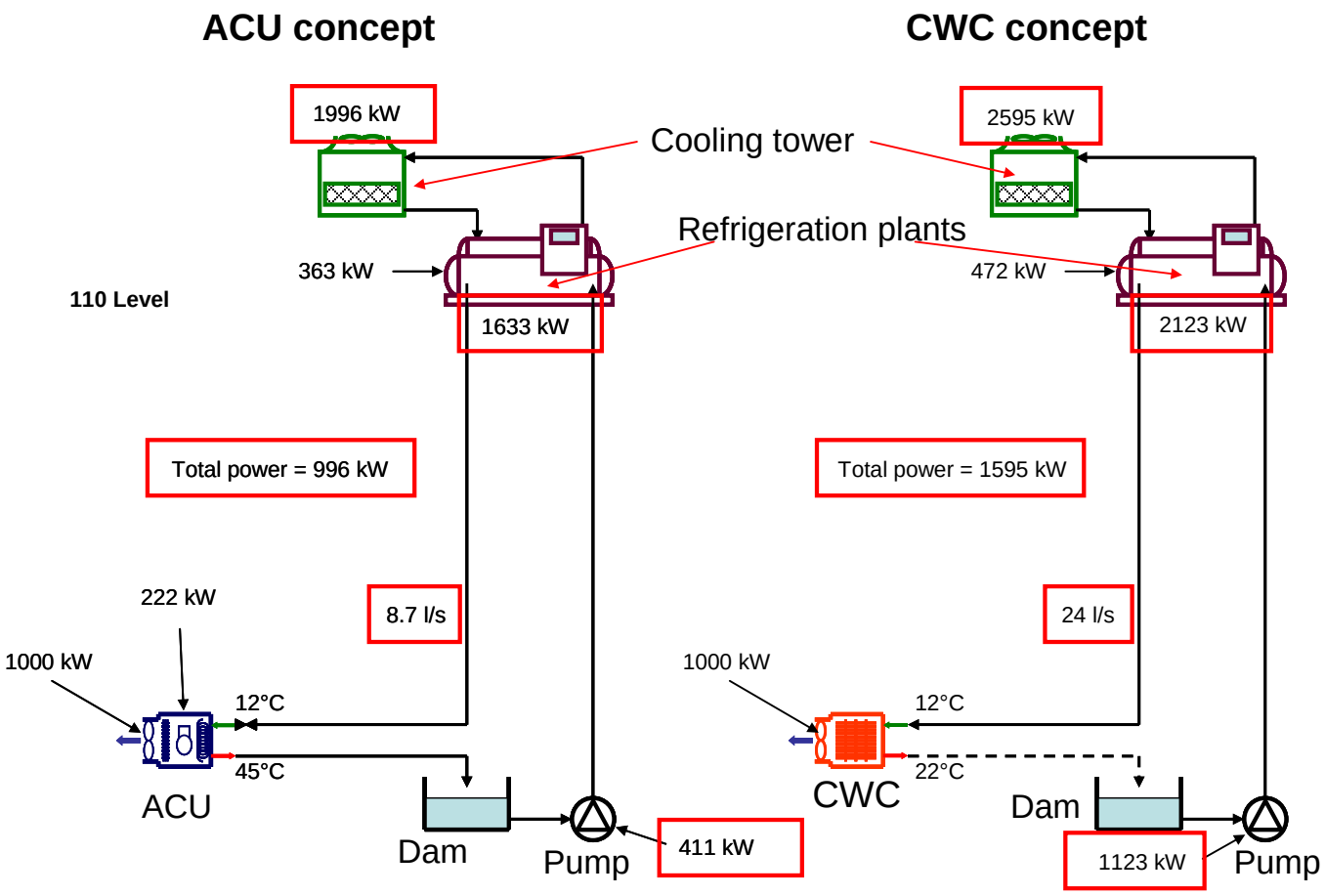

Then the advantages of the ACU in terms of mass flow rate, cooling tower and refrigeration plant requirements, pump sizes and total power required were highlighted in the comparison.

The results of a power requirement study performed for i) a mine without any cooling, ii) one with ACU cooling and only a cooling tower and iii) one with ACU cooling and both a cooling tower and surface refrigeration plant, highlights the lower power requirements involved in using the ACU concept.

Item	Existing layout	ACUs with surface cooling tower	ACUs with surface refrigeration plant and associated condenser cooling tower
ACUs cooling capacity [kW_T]	-	800	800
Refrigeration plant cooling capacity [kW_T]	-	-	936
Cooling tower capacity [kW_T]	-	730	1135
ACUs compressor power requirement [kW_E]	-	178	178
Refrigeration plant compressor power requirement [kW_E]	-	-	199
Cooling tower fan power requirement [kW_E]	-	25	25
Pumping power requirement [kW_E]	806	1308	1016
Total power requirement [kW_E]	806	1511	1418
Delta total power requirement [kW_E]	-	+705	+612

It could be proven that the ACU concept offers a cost-effective and energy-efficient solution for application in deep mine cooling below 2 km (1.2 miles). M-Tech was able to prove the feasibility of the new ACU technology to clients through accurate simulation of the existing setup and the customizable proposed alternative. These simulations also enabled the qualitative and quantitative illustration of the advantages of the new ACU concept in terms of capital and running cost savings. A case study to compare the costs of existing cooling units to the ACU showed that for the exact same cooling power the ACU uses around 1 MW (3.4 MBtu/hour) compared to 1,7MW (3.4 MBtu/hour) used by a conventional CWC. This provides the mines with a potential saving of 700 kWh (2388.4 MBtu). With the current average electrical cost in the mining industry a saving of almost R 1 Million ($139000) per ACU unit can be made over a single year.

Additionally Flownex can be used to determine the excess energy in the flow simulation due to the water drop. It could then be evaluated whether the capital investment of a water turbine to utilize this available energy would be worthwhile for a specific scenario. Different scenarios can then be effectively evaluated and Flownex provides the means to select the optimum solution from both a technical and cost perspective.

Additionally Flownex can be used to determine the excess energy in the flow simulation due to the water drop. It could then be evaluated whether the capital investment of a water turbine to utilize this available energy would be worthwhile for a specific scenario.

COMPRESSOR OPTIMIZATION

This case study reviews an AngloGold Ashanti project which facilitated a saving of 2.5 MW by using Flownex® to optimize compressor and piping systems. The project also won Jean Greyling of AngloGold Ashanti an *eta* (energy efficiency) award.

Jean Greyling, a registered certified energy manager (CEM) holds both a master's degree in mechanical engineering from the North-West University and a government certificate of competency (GCC) for mines and works.

MINING INDUSTRY

CHALLENGE:

The challenge is to optimize components in a system in order to improve the overall efficiency of the system. This specific system is an air-compressor system of which the compressor vane control speed will be studied.

BENEFITS:

- The complete system can be modeled with Flownex®.
- Knowledge of how the system will react under different conditions can be obtained.
- New philosophies can be tested.
- Flownex® can be used to test system upgrades to improve the efficiency of the system which may lead to significant cost and energy savings.

SOLUTION:

In Flownex®, the speed of the vane control and different vane positions of the compressor were simulated in order to investigate the pressure profile to optimise the efficiency of the system.

ANGLOGOLD ASHANTI

"Flownex helped us optimize the compressed air ring and analyze the operating efficiency of the complete fleet. The simulations proved to be extremely valuable in understanding the operating capacity and in addition allowed us to implement a new efficient control philosophy."

Jean Greyling, Energy Manager, Anglo Gold Ashanti

COMPRESSOR OPTIMIZATION

INTRODUCTION

This case study reviews an AngloGold Ashanti project which facilitated a saving of 2.5 MW by using Flownex® to optimize compressor and piping systems. The project also won Jean Greyling of AngloGold Ashanti an *eta* (energy efficiency) award.

SYSTEM DESCRIPTION

Flownex® was used to simulate the AngloGold Ashanti Vaal River compressed air network that consisted of several compressors connected with piping infrastructure over a distance of 32 km. The capacity of some of the compressors ranged from 30 000 to 100 000 CFM and the general operating function of these compressors was to accommodate the underground base loads that ranged between 75 and 106 kg/s.

When the consumption exceeded the supply, the ring pressure would be constant up to a point where the reserve was consumed from the reservoir. This resulted in the system pressure dropping, followed by the compressor master controller sending a command for the Moore controller to open the guide vanes. Although the opening of the guide vanes was not a problem during off-peak conditions, it posed a problem in terms of system response during high-peak times. Therefore an optimization was required.

If the surface pressure fell below a certain point, the mass was increased in the shaft columns to build up pressure at the drill points. The shaft columns only had capacity for a certain flow rate and if this flow rate was exceeded, the effect of auto compression would be lost. The reservoir acted as a damper between supply and consumption and the system pressure could be lost if vanes were not opened fast enough (due to the Moore controller responding too slow). This might have led to the starting of additional compressors which would in turn increase the network's energy consumption. In order to address the problem, the speed of vane control could be increased to minimize the pressure lost in the system.

"Flownex is used to simulate pressure changes and compressor performance for the optimization of a system"

OBJECTIVE OF SIMULATION

The objective of the simulation was to simulate different vane positions to assess the pressure profile and the response of the compressors and the ring pressure.

FLOWNEX MODEL

The Flownex model of the system can be seen in Figure 1.

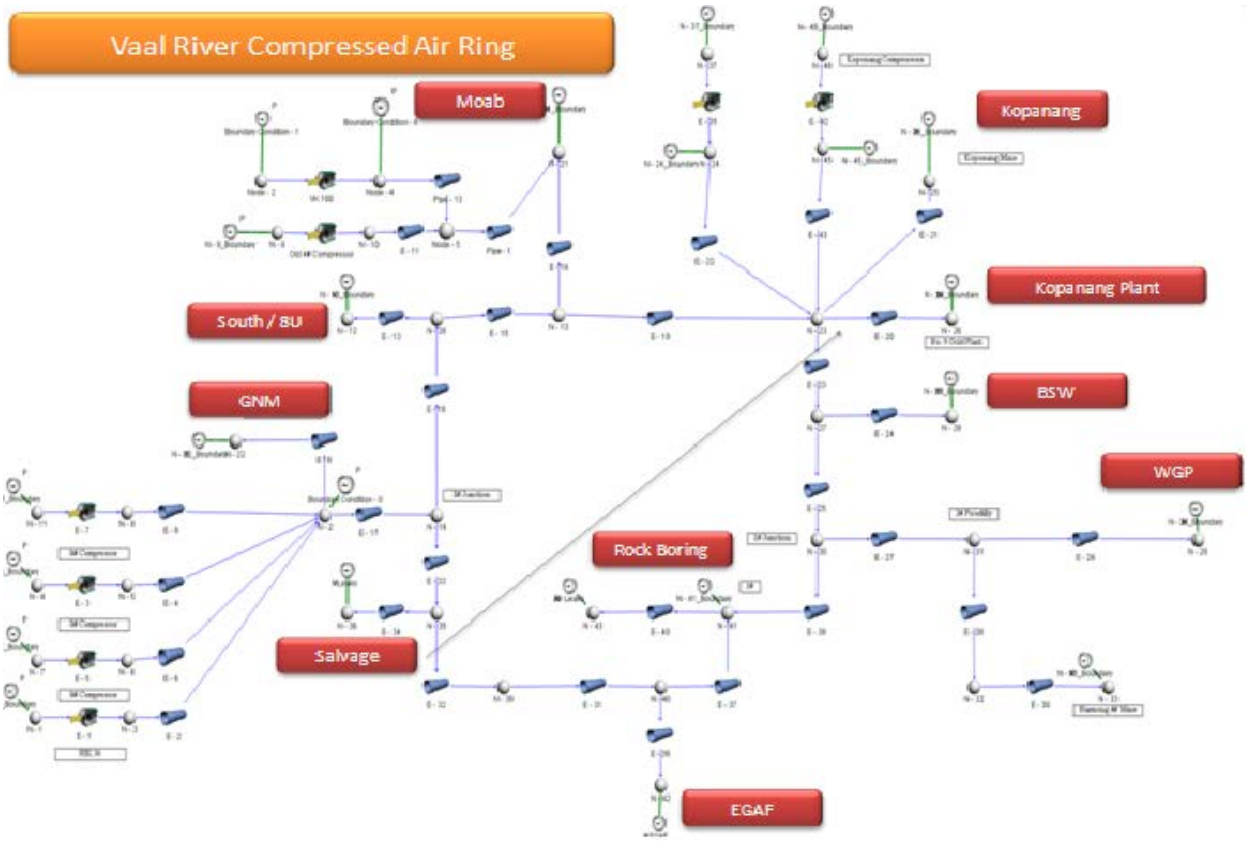

Figure 1: Flownex simulation of the compressed air network.

DESCRIPTION OF SIMULATION

Pipes and compressors are the main elements that were used to simulate the pressure changes and the performance of the compressors within the ring. An iterative solution was done for the proper optimization of vane control speed by using the built-in optimization tool in Flownex®. During the optimization phase, the energy input is minimized to produce the largest amount of air (kg/kWh – optimization).

RESULTS

Flownex® allowed engineers to compare energy usage of existing and proposed system configurations. They then expanded the study by simulating multiple operating ranges for more than one

"Pipes and compressors are the main elements that were used in the simulation to simulate the pressure changes and the performance of the compressor within the ring "

configuration. The results showed savings ranging from 1 – 2.5 MW facilitating an annual saving of 24 GWh.

CONCLUSION

The optimization of a compressed air network was demonstrated in this example. By using the built-in optimization tool, an iterative process was used to determine the savings achievable from running different vane positions for the kWh optimization.

The optimization in Flownex resulted in an annual saving of 24 GWh.